TYPE_C

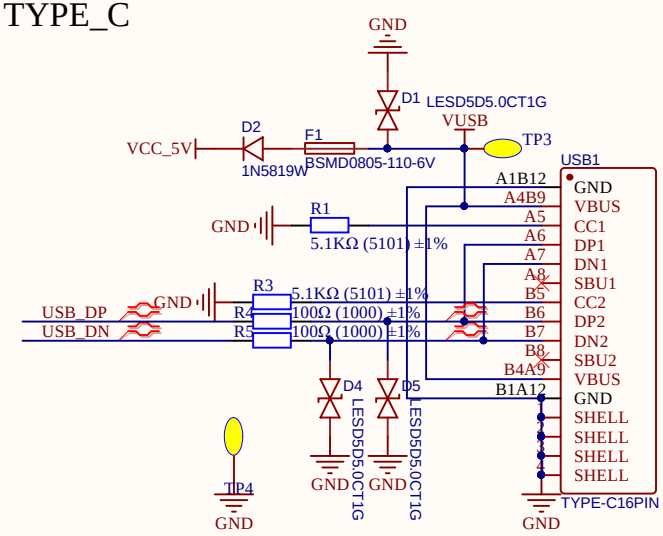

POWER_5V_TO_3V3

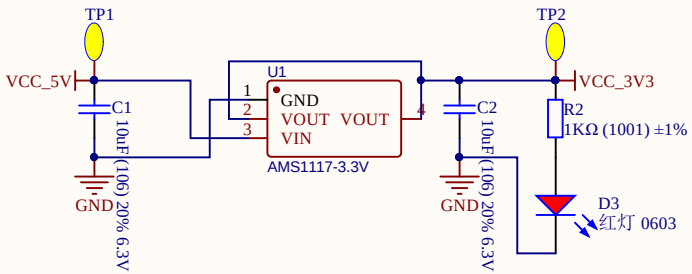

CH340G

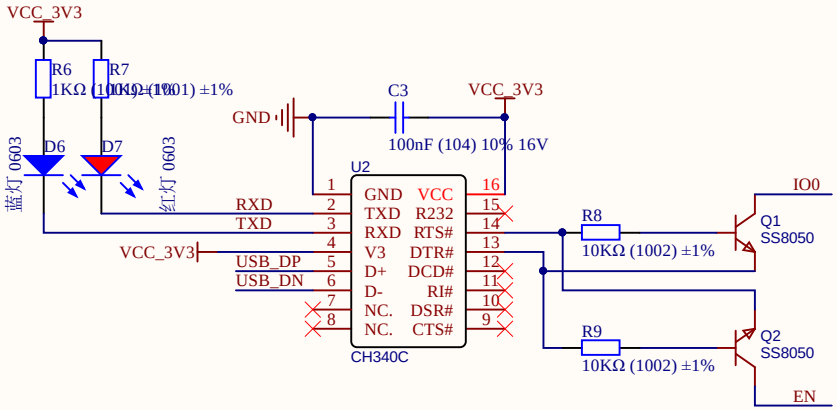

Connect_Main_Control_Board

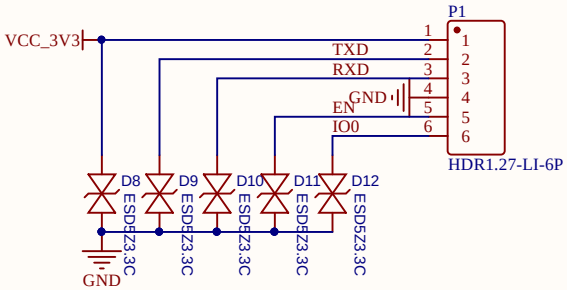

Title		
Size A4	Number	Revision
Date: 2023/9/17		Sheet of
File: C:\Projects\..\UART.SchDoc		Drawn By: